498.3.214-3

Vacuum cleaner motor performance

DOMEL®

Vacuum cleaner motors 498.3.214-3 / 1100W /120V / 60Hz are used for dry aspiration. Technical data and dimensions are given in the table. Vacuum motors consist of universal commutator motor and two fan stage. The rotor is supported with two ball bearings enabling vertical or horizontal installation of motor The motor is designed for insulation class 105(A) and constructed according to EN 60335-1.

Technical data:

Normal operation:	P_m	>=	1180	W
Vacuum:	p_{max}	>=	23,2 93,3	kPa in H_2O
Air Flow at φ50:	$Q_{\varphi 50}$	>=	49 104	dm^3/s CFM
Air Power:	P_{2max}	>=	365	W
Efficiency:	η_{max}	>=	30	%
Mass:	m	=	1,53	kg

Voltage:	120 V
Frequency:	60 Hz
Nominal Power:	1100 W

Max. power 1200W

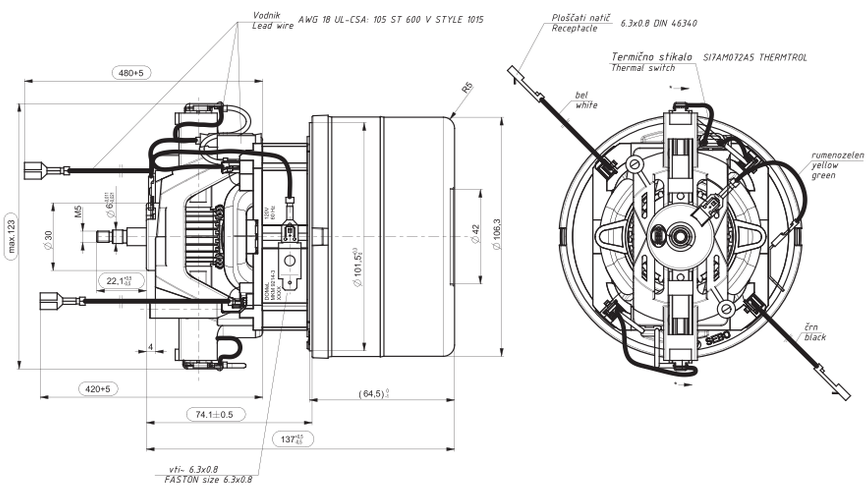

Dimensional and performance data are subject to change without notice.

Orifice		Current	Input Power	Speed	Pressure		Air Flow		Air power	Efficiency
mm	in*	A	W	min^{-1}	kPa	in H_2O	dm^3/s	CFM	W	%
50	2	0,00	0	0	0,0	0,0	0,0	0,0	0	0,0
40	1 1/2	10,81	1237	27233	2,5	20,6	47,6	126,5	116	9,4
30	1 1/8	10,89	1247	27115	6,4	42,4	43,0	103,5	275	22,1
23	7/8	10,62	1219	27389	11,5	62,5	33,4	76,0	384	31,5
19	3/4	10,05	1156	28078	14,3	72,2	25,3	59,8	362	31,4
16	5/8	9,33	1077	29247	16,4	81,0	19,1	43,8	314	29,1
13	1/2	8,47	982	30599	18,5	89,8	13,4	29,5	248	25,2
10	3/8	7,59	883	32173	20,4	96,3	8,3	17,4	169	19,2
6	1/4	6,79	793	33902	21,6	102,2	3,7	8,1	79	9,9
0	0	6,21	726	35284	24,5	107,5	0,0	0,0	0	0,0

Data above represent the preformance of an average motor sample. Individual data may vary due to normal manufacturing variations.
* Orifice in inch is only approximative.